High precision soil PH sensor Introduce

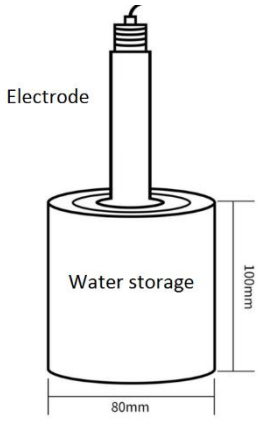

Type NO.: PH-RD-HSOR

HONDE TECHNOLOGY CO.,LTD

1. Product Introduce

The PH-RD-HSOR sensor is a good solution to the traditional measurement of soil pH value, professional calibration instrument, avoid the cumbersome calibration, difficult integration, high power consumption, high price, difficult to carry, etc. It is an intelligent upgrade product of industrial acidity meter, which can be used for water quality, soil PH and so on. The pH value is continuously measured and controlled. The device is suitable for urban sewage treatment plants, soil PH value , chemical industry, printing and dyeing, papermaking, pharmaceutical, electroplating and environmental protection.

2. Product Features

1. Internally use axial capacitance filtering, 100M resistor to increase impedance and enhance stability
2. High integration, small size, low power consumption and convenient carrying;
3. Realize low cost, low price and high performance;
4. High integration, long life, convenience and high reliability;
5. Up to four isolation, can resist the complex interference situation on site, waterproof rating IP68
6. The electrode uses high-quality low-noise cable, can make the signal output length of more than 20 meters
7. One-piece, split, split BNC connector three shapes, suitable for a variety of installation environments

3. Product application

Applicable to water-saving agricultural irrigation, greenhouses, flowers and vegetables, grassland pastures, rapid water quality testing, plant cultivation, scientific experiments and other fields.

4. Product Parameter

1. Technical Parameters

- Measuring range: pH: 0 ~ 14 pH
- Accuracy: ±0.02pH; ±1mV
- Resolution: 0.01pH; 1mV
- Stability: ≤0.02pH/24 hours; ≤3mV/24 hours
- Output signal:

A: Voltage signal (0~2V, 0~2.5V, 0~5V, 0~10V, one of four)

B: 4 to 20 mA (current loop)

C: RS485 (standard Modbus-RTU protocol, device default address: 01)

- Supply voltage: 5 ~ 24V DC (when the output signal is 0 ~ 2V, 0 ~ 2.5V, RS485)
- 12~24V DC (when the output signal is 0~5V, 0~10V, 4~20mA) (can be customized 3.3 ~ 5V DC)
- Working environment: temperature 0 ~ 60 ° C;
- Humidity ≤ 85% RH
- Power consumption: ≤0.5W
- Impedance requirements for current signals

Supply voltage	9V	12V	20V	24V
Maximum impedance	125Ω	250Ω	500Ω	>500Ω

5. Product size

- PH host

- Electrode

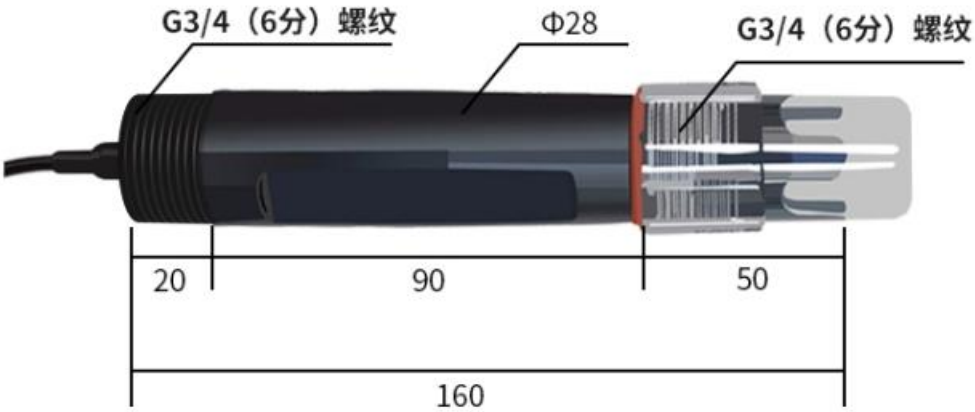

PH electrode

- Square stainless steel water storage tank

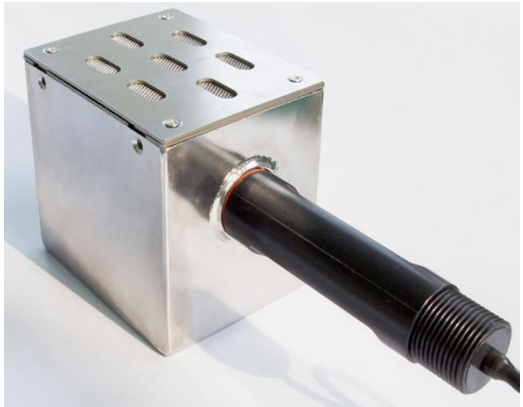

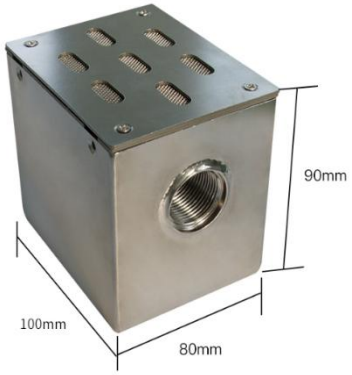

- Round stainless steel water storage tank

6. Instructions

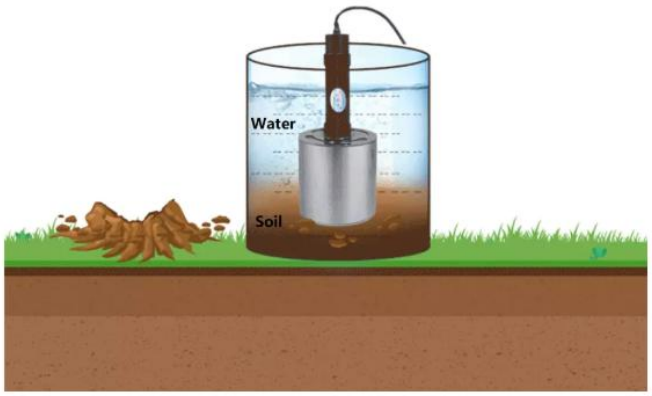

Prepare water storage tank solution on site

1. Take soil at the measurement site, add water and stir, the ratio of water and soil is 5: 1

2. Connect the electrode to the water storage tank.

3. After the water and soil boundaries are stable, put the water storage tank into the upper aqueous solution, fill the solution, and remove it for use

Digging to store electrodes

1. Dig a pit with a diameter of about 10 cm and a depth of about 20-50 cm, and put the PH electrode containing the solution into the pit.

2.Backfill the soil while leaving a low-lying place to seep under water, if there is no rain for two months, you need to add water manually

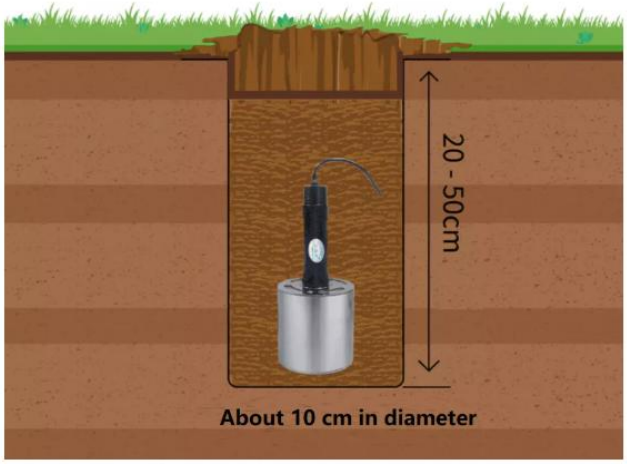

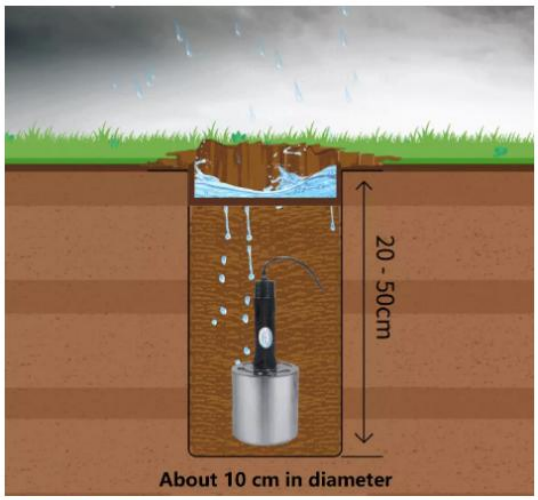

Rain keep

Leave a low-lying place above to ensure that it will remain in the rain.

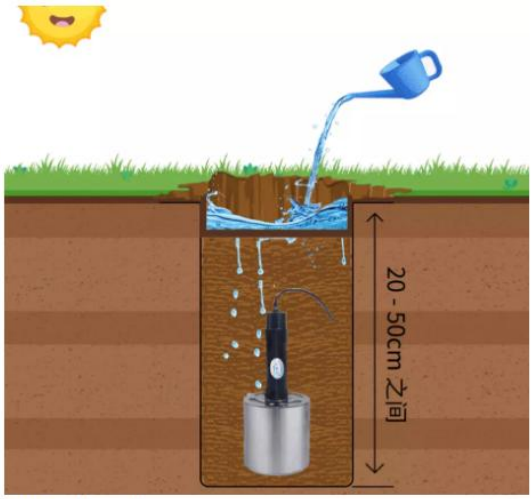

Artificial watering

If there is no rain for more than two months, you need to manually water

7. Line connection diagram

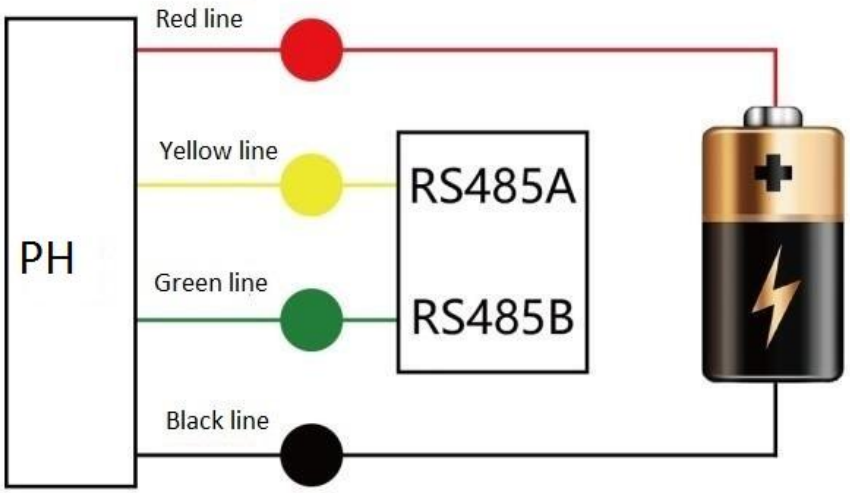

(RS485)

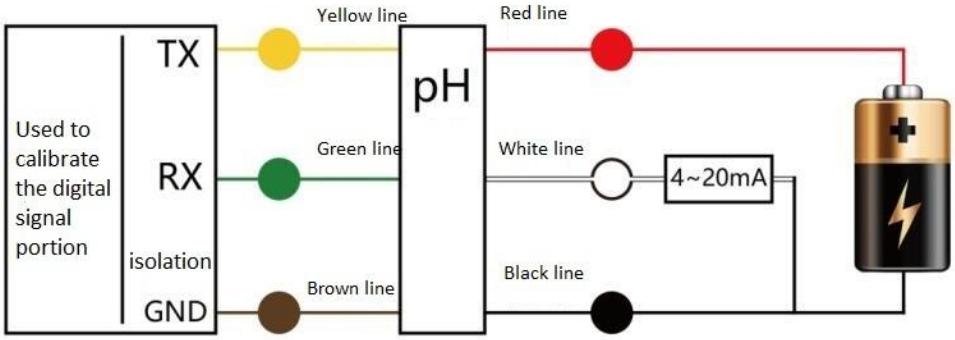

(4~20mA)

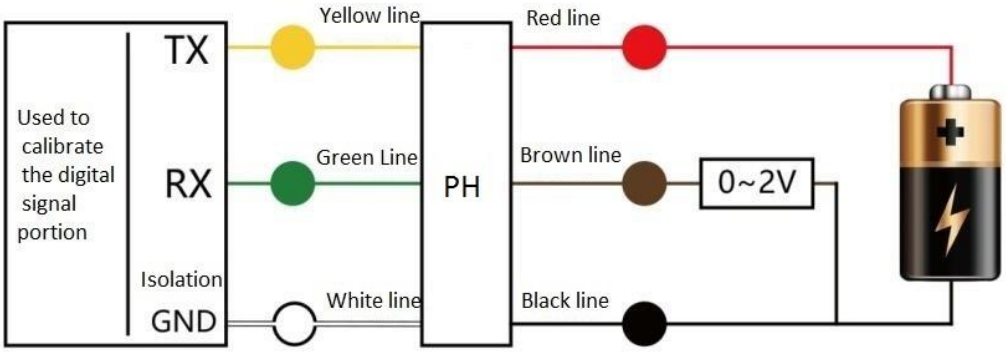

(0~2V、0~5V、0~10V)

8. Data conversion method

The PH sensor has good linear characteristics. The following is a typical calibration formula.

V: voltage value collected by the collector, unit: V;

A: Current value collected by the collector, unit: mA

output signal	pH conversion method
0 ~ 2V DC	PH = 7*V
0 ~ 5V DC	PH = 2.8*V
0 ~ 10V DC	PH = 1.4*V
4 ~ 20mA	PH = 0.875*A – 3.5

RS485 signal (default address 01):

Standard Modbus-RTU protocol, baud rate: 9600; check digit: none; data bit: 8; stop bit: 1

1. modify the address, for example: change the address of the transmitter with address 1 to 2, host → slave

Original address	Function code	Reserved 1	Reserved 2	Reserved 3	new address	CRC16 low	CRC16 high
0X01	0X06	0X00	0X30	0X00	0X02	0X08	0X04

Remark: If you forget the original address of the sensor, you can use the broadcast address 0XFE instead. When using 0XFE, the host can only be connected to one slave, and the return address is still the original address, which can be used as the address query method.

2. Query data

Query the data of the transmitter (address 1) (PH value), host → slave

Address	Function code	Start register address high	Start register address low	Register length high	Register length low	CRC16 low	CRC16 high
0X01	0X03	0X00	0X00	0X00	0X01	0X84	0X0A

If the transmitter receives correctly, return the following data, slave → host

Address	Function code	Data lenght	Register 0 data high	Register 0 data low	CRC16 low	CRC16 high
0X01	0X03	0X02	0X02	0XAE	0x38	0X98
			PH Value			

Data representation method:

Data representation: Convert data to decimal ÷100

The above data indicates that the pH value is 6.86

3. PH value offset calibration

Data description	Data length	Register address	Type of data	Read and write type	Note
PH offset value	1	0X0054	Integer	Read/Write	Numerical accumulation, 0X0000: Restore to the initial value

For example add 0.1 to the sensors address 01 to the present value, send the following instruction

Address	Function code	Register data high	Register data low	PH offset value		CRC16 low	CRC16 high
0X03	0X06	0X00	0X54	00	0A	0x49	0XFF

If success, feed back : 03 06 00 54 00 0A 49 FF.

9. Precautions for use

1. In order to ensure that the electrode is correctly measured on the pipeline, the data gap between the measuring cells should be avoided to cause data misalignment;
2. Please check whether the packaging is intact, and check whether the product model is consistent with the selection;
3. Do not electrify the wiring, the wiring is completed, and the power can be turned on after checking.
4. Do not arbitrarily change the components or wires that have been soldered at the time of shipment;
5. The sensor is a precision device, please do not disassemble it yourself, use sharp objects or corrosive liquid to touch the sensor surface to avoid damage to the product;